ON Semiconductor

Schematic for the NCP3235GEVB Evaluation Board

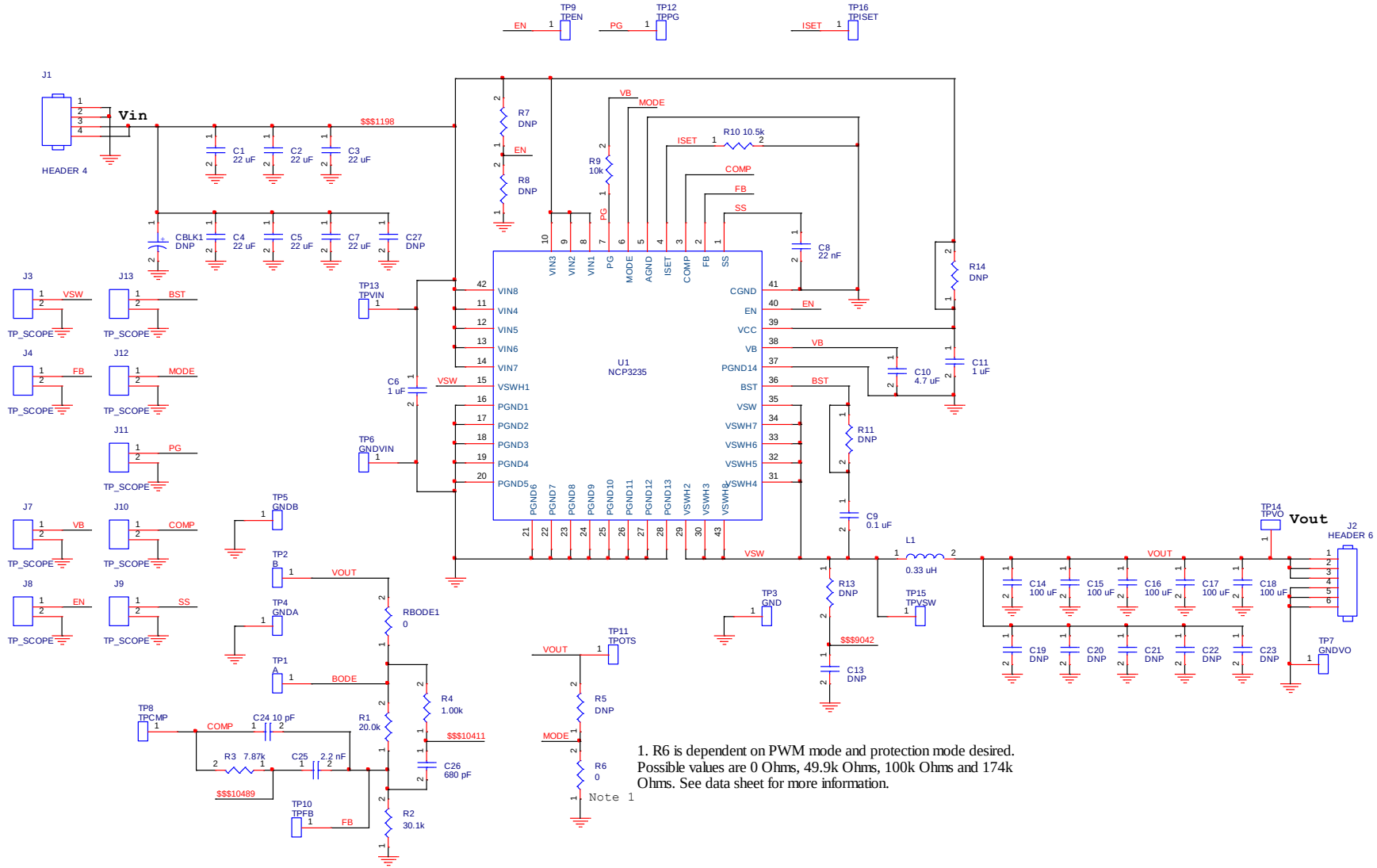

1. R6 is dependent on PWM mode and protection mode desired. Possible values are 0 Ohms, 49.9k Ohms, 100k Ohms and 174k Ohms. See data sheet for more information.